2023

COMMENCAL T.E.M.P.O. OHLINS EDITION YELLOW

SPECS

CADRE
T.E.M.P.O., 125 mm travel

29", Alloy 6066, triple butted tubes, T4, T6. Enduro bearings

AMORTISSEUR
OHLINS TTX1 Air

210 x 50 mm, HSC, LSC, rebound, 3 positions, Evol LV

FOURCHE
OHLINS RXF 36 m.2 Air, 140 mm travel

29", TTX 18 damper, Ramp Up chamber, LSC, HSC, rebound, Boost (15 x 110 mm), 51 mm offset

JEU DE DIRECTION
ACROS ZS56 / ZS56

Alloy cups, sealed bearings, Integrated cable routing

POTENCE
RIDE ALPHA 40

40 mm extension, 31,8 mm

CINTRE
RIDE ALPHA R20 760 on S - RIDE ALPHA R27 780 on M / L - RIDE ALPHA R27 800 on XL

31.8 mm, 760 mm width, 20 mm rise, Alloy 6061 on S - 31.8 mm, 780 mm width, 27 mm rise, Alloy 6061 on M / L - 31.8 mm, 800 mm width, 27 mm rise, Alloy 6061 on XL

GRIPS
ODI Elite Motion

Single clamp, black

FREINS
TRP Trail EVO, 4 pistons, resin pads

Rotor: TRP R1 203 / 180 mm, 6-bolt

SHIFTERS
SRAM GX Eagle

12s

DERAILLEUR
SRAM GX Eagle

12s

BOITIER DE PEDALIER
SRAM DUB

Pressfit

PEDALIER
SRAM GX Eagle, 170 mm crank arms, Boost

Chainring: SRAM GX Eagle, 32t, Narrow-Wide

CHAINE
SRAM GX Eagle

12s

CASSETTE
SRAM GX Eagle

12s, 10-52t

JANTES
CRANKBROTHERS Synthesis Enduro Alloy

Front: 29", 28 holes, 31.5mm inner width - Rear: 29", 32 holes, 29.5mm inner width

MOYEUX
Rear: INDUSTRY NINE 1/1 - Front: INDUSTRY NINE 1/1

Rear: 32 holes, 6 pawls - Front: 28 holes

RAYONS
SAPIM D-Light

J-Bend, 2.0-1.65-2.0mm, double butted, stainless, with Nylok, black

PNEUS
Rear: MAXXIS Dissector - Front: MAXXIS DHR II

Rear: 29" x 2.4" WT, dual compound, EXO, Tubeless Ready - Front: 29" x 2.4" WT, 3C MaxxGrip, EXO, Tubeless Ready

TIGE DE SELLE
KS Lev Integra

31.6 mm, 150 mm on S, 175 mm on M, 200 mm on L/XL

SELLE
FIZIK Terra Alpaca X5

145 mm width, S-alloy rails

POIDS
14,5 kg

Average weight for S size, without pedals. Weight may differ slightly due to manufacturing tolerances.

PEDALES
No

COULEUR
Ohlins Yellow

Matte Finish

ACCESSOIRES
Down tube protector, chainstay protector, seatstay protector

- Vidéos

TECH

TYPE DE VELO
TRAIL 29"

CADRE
AL-6066

POIDS DU CADRE
3,125 kg, raw without accessories

DEBATTEMENT ARRIERE
125 mm

ENTRE-AXE / COURSE
210 x 50 mm

COMPATIBLE PIGGY BACK
Yes

BUSELURES AMORTISSEUR
20 x 10 mm / 30 x 10 mm

HAUTEUR DE FOURCHE RECOMMANDEE / MAX
551 mm / 561 mm

JEU DE DIRECTION
ZS56 / ZS56, Integrated cable routing

LARGEUR MAXIMALE PNEUS (ETRTO)
63mm / dim. 756

STANDARD FREIN A DISQUE
POSTMOUNT 180 mm

DIAMETRE MAX DISQUE DE FREIN AR
200 mm

DIAMETRE TIGE DE SELLE / COLLIER DE SELLE
31,6 mm / 34,9 mm

BOITIER DE PEDALIER
BB92 Press Fit

ISCG
ONLY ON THE TOP / CUSTOM, NO ISCG

AXE DE ROUE ARRIERE
12 x 148 mm / Maxle stealth 180 mm M12x1,0

- Géometrie
- Tailles

Front Triangle

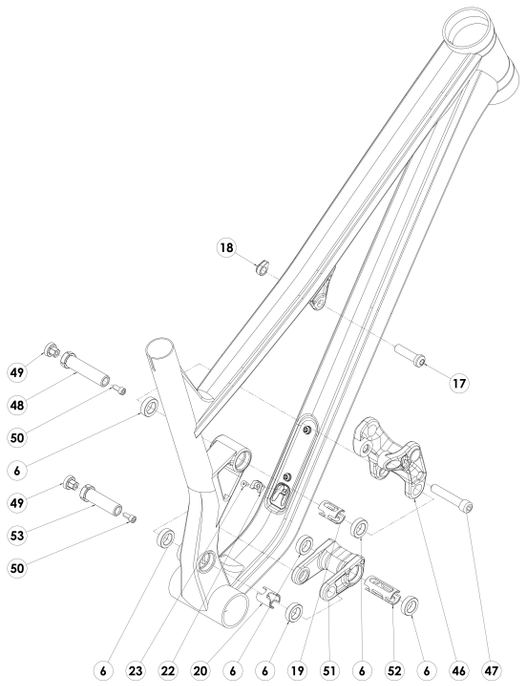

Index	Ref	Nom		Photo
17+18	W22TPOAXLESHFT	AXE AMORTISSEUR / TRIANGLE AVANT T.E.M.P.O.	10 N.m	
19	W22TPOSPACERUL	ENTRETOISE UPPER LINK T.E.M.P.O.		
20	W22TPOSPACERLLFT	ENTRETOISE LOWER LINK / TRIANGLE AVANT		
22+23	W22TPOCABLEGUIDE	GUIDE CABLE TUBE DIAGONAL T.E.M.P.O.	3 N.m	
46	W22TPOUPPERLINK	UPPER LINK T.E.M.P.O.		
47	W22TPOAXLESHUL	AXE AMORTISSEUR / UPPER LINK T.E.M.P.O.	10 N.m	
48+49+50	W22TPOAXLEULFT	AXE UPPER LINK / TRIANGLE AVANT T.E.M.P.O.	Axle : 20 N.m / Expander Bolt : 6 N.m	
49+50+53	W22TPOAXLELLFT	AXE LOWER LINK / TRIANGLE AVANT T.E.M.P.O.	Axle : 20 N.m / Expander Bolt : 6 N.m	
51	W22TPOLOWERLINK	LOWER LINK T.E.M.P.O.		
52	W22TPOSPACERLLRT	ENTRETOISE LOWER LINK / TRIANGLE ARRIERE T.E.M.P.O.		
6	W21EB3802	ROULEMENT ENDURO BEARINGS 3802 LLU MAX	15 x 24 x 7	

TopTube

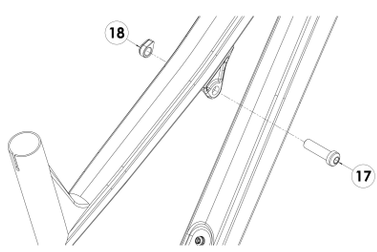

Index	Ref	Nom		Photo
17+18	W22TPOAXLESHFT	AXE AMORTISSEUR / TRIANGLE AVANT T.E.M.P.O.	10 N.m	

Upper Link

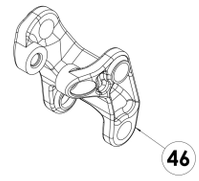

Index	Ref	Nom	Photo
46	W22TPOUPPERLINK	UPPER LINK T.E.M.P.O.	

Lower Link

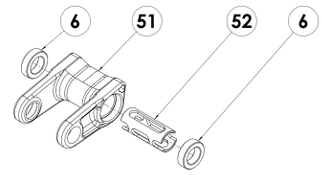

Index	Ref	Nom		Photo
51	W22TPOLOWERLINK	LOWER LINK T.E.M.P.O.		
52	W22TPOSPACERLLRT	ENTRETOISE LOWER LINK / TRIANGLE ARRIERE T.E.M.P.O.		
6	W21EB3802	ROULEMENT ENDURO BEARINGS 3802 LLU MAX	15 x 24 x 7	

Cable Guide

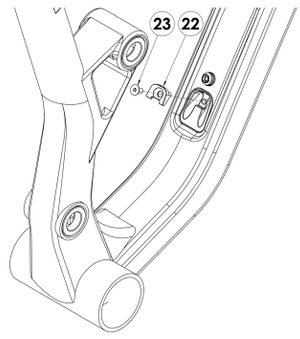

Index	Ref	Nom		Photo
22+23	W22TPOCABLEGUIDE	GUIDE CABLE TUBE DIAGONAL T.E.M.P.O.	3 N.m	

Rear Triangle

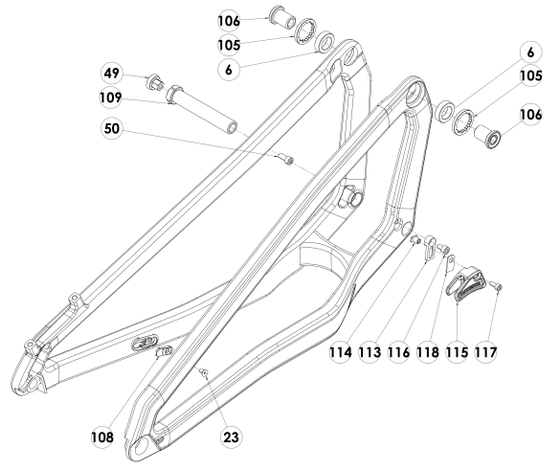

Index	Ref	Nom		Photo
105	W21METALOCKRING	ECROU BLOQUE ROULEMENT META 2021-2022	5 N.m	
106	W22TPOAXLEULRT	AXE UPPER LINK / TRIANGLE ARRIERE T.E.M.P.O.	12 N.m	
23+108	W19CLHCABLEGUIDEB	GUIDE CABLE INFERIEUR CLASH, META, META POWER, FRS, T.E.M.P.O, DHV5	3 N.m	
49+50+109	W22TPOAXLELLRT	AXE LOWER LINK / TRIANGLE ARRIERE T.E.M.P.O.	Axle : 20 N.m / Expander Bolt : 6 N.m	
6	W21EB3802	ROULEMENT ENDURO BEARINGS 3802 LLU MAX	15 x 24 x 7	

Assembly

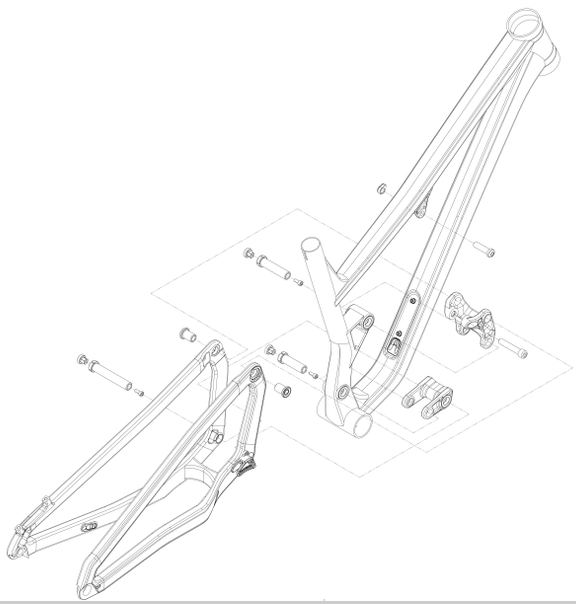

Index	Ref	Nom	Photo

Protectors

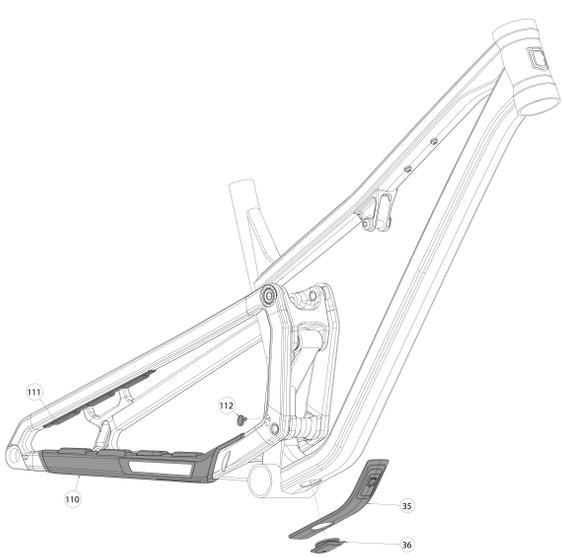

Index	Ref	Nom		Photo
110	W22TPOPROTECCS	PROTEGE BASE T.E.M.P.O.		
111	W22TPOPROTECSS	PROTEGE HAUBAN T.E.M.P.O.		
112	W22TPOPLUGCG	PROTECTION FILETAGE T.E.M.P.O.		
35	W22TPOPROTECDTS	PROTECTION DE DOWN TUBE T.E.M.P.O.	Small Size Frame	
35	W22TPOPROTECDTM	PROTECTION DE DOWN TUBE T.E.M.P.O.	Medium Size Frame	
35	W22TPOPROTECDTL	PROTECTION DE DOWN TUBE T.E.M.P.O.	Large Size Frame	
35	W22TPOPROTECDTXL	PROTECTION DE DOWN TUBE T.E.M.P.O.	X-Large Size Frame	
36	W22TPOPLUGDTP	BOUCHON PROTECTION DE DOWN TUBE T.E.M.P.O.		

Derailleur Routing

Index	Ref	Nom	Photo

Brake Routing

Index	Ref	Nom	Photo

Dropper Routing

Index	Ref	Nom	Photo

Internal Headset Assembly

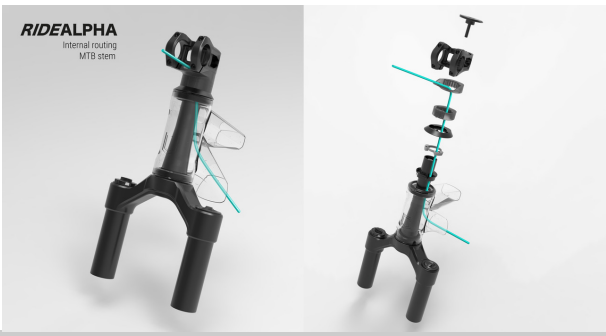

Index	Ref	Nom	Photo

Internal Headset Assembly

Index	Ref	Nom	Photo
Lower	A23JDDICRBOTV5	KIT DE ROULEMENT DE DIRECTION BAS ZS56 ACROS ICR POUR T.E.M.P.O.	
Upper	A23JDDICRTOPV5	KIT DE ROULEMENT DE DIRECTION HAUT ZS56 ACROS ICR POUR T.E.M.P.O.	

Internal Headset Assembly

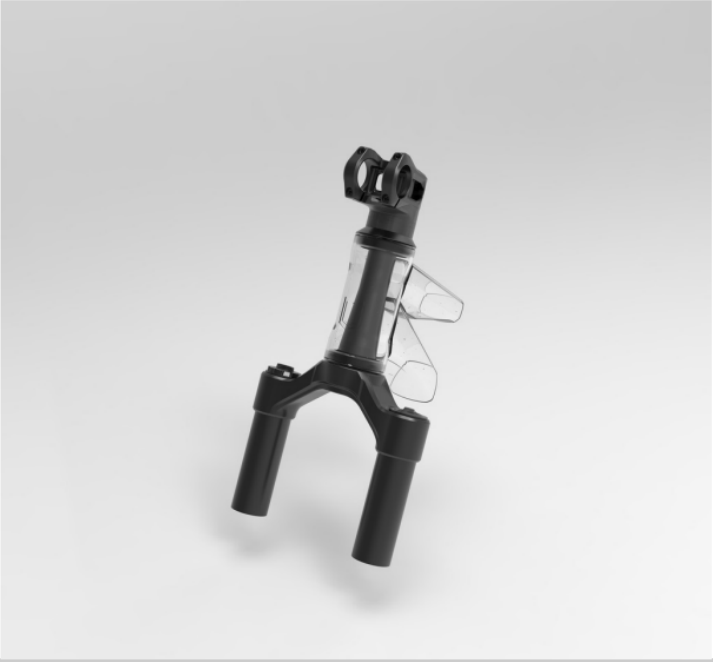

Index	Ref	Nom	Photo

PARTS

Headset

ICR ZS56/28,6 - ZS56/40

Bottom Bracket

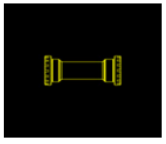

PressFit BB92

Rear hanger

A22HANGSRAMUDH

FreeHub Body

INDUSTRY NINE 1/1
XD - Alloy