2022

COMMENCAL META SX OHLINS EDITION KESWICK GREEN

SPECS

CADRE
2022 Meta SX, 160 mm travel

29"-27.5", Alloy 6066, triple butted tubes, T4, T6. Enduro bearings

AMORTISSEUR
OHLINS TTX22M

230 x 62.5 mm, HSC, LSC, rebound. Spring rates: 343lbs on S, 388lbs on M, 434lbs on L, 480lbs on XL

FOURCHE
OHLINS RXF38 m.2 Air, 170 mm travel

29", TTX 18 damper, Ramp Up chamber, LSC, HSC, rebound, Boost (15 x 110 mm), 44 mm offset

JEU DE DIRECTION
ACROS ZS44/ZS56

Alloy cups, sealed bearings

POTENCE
RIDE ALPHA Freeride 40

40 mm extension, 31,8 mm

CINTRE
RIDE ALPHA R20 760 on S - RIDE ALPHA R27 780 on M / L - RIDE ALPHA R27 800 on XL

31.8 mm, 760 mm width, 20 mm rise, Alloy 6061 on S - 31.8 mm, 780 mm width, 27 mm rise, Alloy 6061 on M / L - 31.8 mm, 800 mm width, 27 mm rise, Alloy 6061 on XL

GRIPS
ODI Elite Motion

Soft pro compound, single clamp, black

FREINS
SHIMANO XT, 4 pistons, I-Spec EV compatible

Rotors: Delivered with Shimano or Galfer discs.

SHIFTERS
SHIMANO XT

12s

GUIDE CHAINE
-

DERAILLEUR
SHIMANO XT

12s

BOITIER DE PEDALIER
SHIMANO BBMT800

Pressfit

PEDALIER
SHIMANO XT, 170 mm crank arms, Boost

Chainring: SHIMANO XT, 32t, Dynamic Chain Engagement + Technology

CHAINE
SHIMANO XT

12s

CASSETTE
SHIMANO XT

12s, 10-51t

JANTES
Rear: DT SWISS EX511 27.5" - Front: DT SWISS EX511 29"

Rear: 27.5", 28h, 30 mm inner width - Front: 29", 28h, 30 mm inner width

MOYEUX
Rear: DT SWISS 350 - Front: DT SWISS 350

Rear: 28h, sealed bearings, 12 x 148 mm, MicroSpline, 36t ratchet, black - Front: 28h, sealed bearings, 15 x 110 mm, black

RAYONS
DT SWISS Competition

Straightpull, 2.0-1.8-2.0mm, double butted, stainless, with Nylok, black

PNEUS
Rear: SCHWALBE Big Betty - Front: SCHWALBE Magic Mary

Rear: 27.5" x 2.4", Super Trail, Addix Soft, Tubeless Easy - Front: 29" x 2.4", Super Trail, Addix Soft, Tubeless Easy

TIGE DE SELLE
KS Lev Integra

34.9 mm, travel: 125 mm on S, 150 mm on M, 175 mm on L, 200 mm on XL, SouthPaw alloy remote

SELLE
SDG Bel Air V3 Atmos

Lux-Alloy Rails

POIDS
15,9 kg

Average weight for S size, without pedals. Weight may differ slightly due to manufacturing tolerances.

PEDALES
No

COULEUR
Keswick Green

Shiny Finish

ACCESSOIRES
Down tube protector, chainstay protector, seatstay protector

- Vidéos

TECH

TYPE DE VELO
ENDURO 27"/29"

CADRE
AL-6066

POIDS DU CADRE
3,9 kg

DEBATTEMENT ARRIERE
160 mm

ENTRE-AXE / COURSE
230 x 62,5 mm

COMPATIBLE PIGGY BACK
Yes

BUSELURES AMORTISSEUR
20 x 10 mm

HAUTEUR DE FOURCHE RECOMMANDEE / MAX
586 mm / 596 mm

DOUILLE DE DIRECTION
TAPERED 1-1/8" / 1-1/2"

JEU DE DIRECTION
ZS44 / ZS56

LARGEUR MAXIMALE PNEUS (ETRTO)
68-584

STANDARD FREIN A DISQUE
POSTMOUNT 200 mm

DIAMETRE MAX DISQUE DE FREIN AR
220 mm

DIAMETRE TIGE DE SELLE / COLLIER DE SELLE
34,9 mm / 38,5 mm

BOITIER DE PEDALIER
BB92

ISCG
ISCG 05

DERAILLEUR AVANT
No

AXE DE ROUE ARRIERE
12 x 148 mm

- Géometrie
- Tailles

Contact System

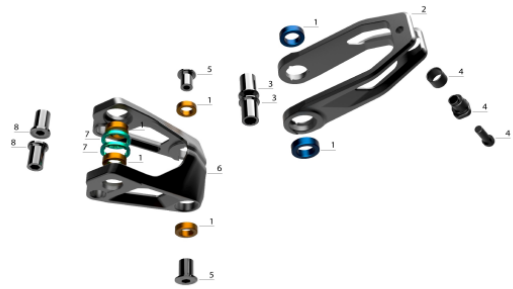

Index	Ref	Nom		Photo
1	W21EB3802	ROULEMENT ENDURO BEARINGS 3802 LLU MAX	15 x 24 x 7	
2	W22MTXCLEVIS	CLEVIS META SX ET TR 29.3		
3	W21METAAXLERKCL	AXES BASCULEUR / CLEVIS META 29.2	12 N.m	
4	W21MPWTRAXLESHCL	KIT COMPLET FLIP CHIP AMORTISSEUR / CLEVIS META & META POWER	9 N.m	
4 a	W22MTXINSSHCL	INSERT CUSTOM AMORTISSEUR META SX, TR & POWER		
4 b	W22MTXFLIPCHIP	FLIP CHIP META SX, TR & POWER		
4 c	W22MTXAXLESHCL	AXE AMORTISSEUR / CLEVIS META SX, TR & POWER	9 N.m	
5	W21METAAXLERKFT	AXES BASCULEUR / TRIANGLE AVANT META 2021-2023	12 N.m	
6	W22MTXROCKER	BASCULEUR META SX		
7	W21METALOCKRING	ECROU BLOQUE ROULEMENT META 2021-2022	5 N.m	
8	W21METAAXLERKSS	AXES BASCULEUR / HAUBANS META 2021-2023	12 N.m	
BEARING KIT	W21EBMETA	ROULEMENTS ENDURO BEARINGS META	2 x 6804 / 8 x 3802	

Chainstays / Seatstays

Index	Ref	Nom		Photo
1	W21EB3802	ROULEMENT ENDURO BEARINGS 3802 LLU MAX	15 x 24 x 7	
10	W21METAAXLECSSS	AXES BASES / HAUBANS META 29.2	12 N.m	
7	W21METALOCKRING	ECROU BLOQUE ROULEMENT META 2021-2022	5 N.m	
9	W21METAWASHERCSSS	RONDELLES BASES / HAUBANS META 2021-2023		
BEARING KIT	W21EBMETA	ROULEMENTS ENDURO BEARINGS META	2 x 6804 / 8 x 3802	

Dropouts

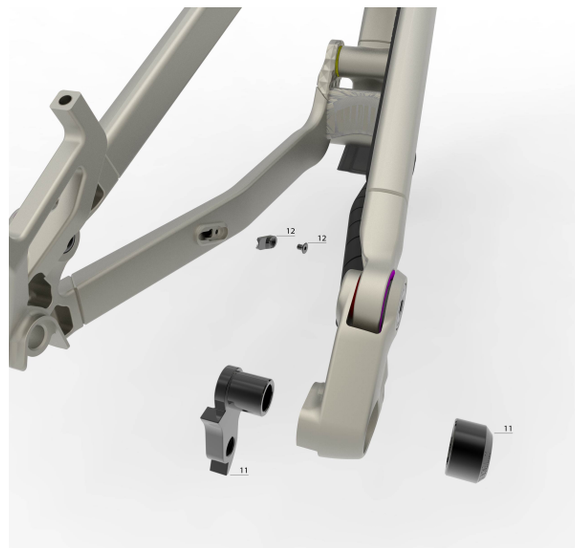

Index	Ref	Nom		Photo
-	W19AXLEWHEELBOOST	AXE DE ROUE ARRIERE - STANDARD MAXLE BOOST	12 N.m	
11	W21METARHR	PATTE DE DERAILLEUR META AM, TR & SX 2021 - 2022	10 N.m	
12	W19CLHCABLEGUIDEB	GUIDE CABLE INFERIEUR CLASH, META, META POWER, FRS, T.E.M.P.O, DHV5	3 N.m	

Downtube

Index	Ref	Nom		Photo
12	W19CLHCABLEGUIDEB	GUIDE CABLE INFERIEUR CLASH, META, META POWER, FRS, T.E.M.P.O, DHV5	3 N.m	
19	W21METAPROTECDT	PROTECTION DE DOWN TUBE META 2021-2023	3 N.m	

TopTube

Index	Ref	Nom		Photo
13	W21METAAXLESHTT	KIT AXE AMORTISSEUR / TUBE SUPERIEUR META 2021-2023	9 N.m	

Main Pivot

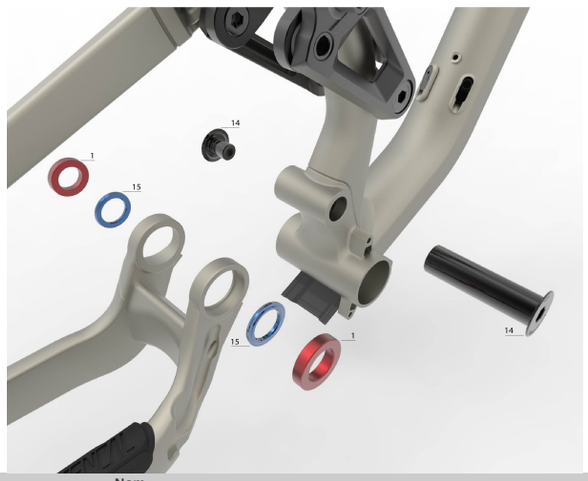

Index	Ref	Nom		Photo
1	W19EB6804	ROULEMENT ENDURO BEARINGS 6804 LLU MAX	20 x 32 x 7	
14	W21METAAXLEMP	KIT AXE PIVOT PRINCIPAL META 2021-2023	35 N.m / Boît : W21METABOLTMP	
15	W21METAWASHERMP	RONDELLES PIVOT PRINCIPAL META 2021-2023		
BEARING KIT	W21EBMETA	ROULEMENTS ENDURO BEARINGS META	2 x 6804 / 8 x 3802	

Seals

Index	Ref	Nom		Photo
16	W18SEAL1H	PROTECTION DE PASSAGE INTERNE CABLERIE - 1 TROU		

16	W18SEAL2H	PROTECTION DE PASSAGE INTERNE CABLERIE - 2 TROUS	
16	W18SEALNOH	PROTECTION DE PASSAGE INTERNE CABLERIE - 0 TROU	
17	W12HOSESEAL	JOINT DE PASSAGE DURITE INTERNE	
18	W19PROTECPICKUP	PROTECTION DE DOWN TUBE POUR TRANSPORT EN PICKUP	

Protectors

Index	Ref	Nom	Photo
20	W19CLHPROTECSS	PROTECTION DE HAUBAN CLASH, META & FRS	
21	W19CLHPROTECCS	PROTECTION DE BASE CLASH, META & FRS	

Dropper Post Routing

Index	Ref	Nom	Photo