2022

COMMENCAL META POWER SX RIDE

SPECS

CADRE
2022 META POWER, 165 mm travel

29'-27.5''', Alloy 6066, triple butted tubes, T4, T6. Enduro bearings

MOTEUR
SHIMANO DU-EP800

Max. torque: 85N.m, 250W

BATTERIE
SHIMANO BT-E8036

630Wh

AFFICHAGE
SHIMANO SC-EM800

LCD colored display featuring: Clock, Assist mode display, Battery charge level, Current Speed, Maximum speed, Average speed, Trip distance, Trip time, Estimated range, Range overview, Cadence, Human output power (as scale indicator), Calorie setting, Maintenance alert, Bluetooth LE connection (for E-Tube Project communication)

AMORTISSEUR
ROCKSHOX Deluxe Select R

230 x 65 mm, debonair

FOURCHE
ROCKSHOX DOMAIN RC, 170 mm travel

29'', rebound, compression, Boost (15 x 110 mm), 44 mm offset, 1 Token

JEU DE DIRECTION
ACROS ZS56 / ZS66

Alloy cups, sealed bearings

POTENCE
RIDE ALPHA Freeride 40

40 mm extension, 31,8 mm

CINTRE
RIDE ALPHA R20 POWER on S - RIDE ALPHA R27 POWER on M / L / XL

Internal Di2 cable routing - 31.8 mm, 760 mm width, 20 mm rise, Alloy 6061 on S - 31.8 mm, 780 mm width, 27 mm rise, Alloy 6061 on M / L - 31.8 mm, 800 mm width, 27 mm rise, Alloy 6061 on XL

GRIPS
ODI Elite Motion

Soft pro compound, single clamp, black

FREINS
SRAM Guide RE

4 pistons, MatchMaker compatible

DISQUES
SRAM HS2, 220 mm

6-bolt, bolt-on magnet

SHIFTERS
SRAM SX Eagle

12s

GUIDE CHAINE
RIDE ALPHA EP8

32-34t

DERAILLEUR
SRAM SX Eagle

12s

BOITIER DE PEDALIER

SHIMANO

MANIVELLES
SHIMANO FC-EM900

160 mm crank arms

PLATEAU
E13 E*Spec Plus EP8

34t, Narrow-Wide, direct mount

CHAINE
SRAM NX Eagle

12s

CASSETTE
SRAM PG-1210

12s, 11-50t

JANTES
Rear: SPANK Spike Race 33 - Front: SPANK Spike Race 33

Rear: 27.5", 32h, 28 mm inner width - Front: 29", 32h, 28 mm inner width front

MOYEUX
Rear: FORMULA MSC-148S - Front: FORMULA CL-811

Rear: 32h, sealed bearings, e-bike specific - Front: 32h, sealed bearings

RAYONS
SAPIM Strong

J-Bend, 2.34 / 2.0 mm, double butted, stainless, with Nylok, black

PNEUS
Rear: MAXXIS DHR II - Front: MAXXIS Assegai

Rear: 27.5" x 2.4", WT, Maxx Terra, Double Down casing, 3C, TR - Front: 29" x 2.5", WT, 3C Maxx Grip, Exo+, TR

TIGE DE SELLE
KS Ragei

31.6 mm, travel: 125 mm on S, 170 mm on M/L, 190 mm on XL, SouthPaw alloy remote

SELLE
FIZIK Terra Aidon X5

S-Alloy Mobius rails

POIDS
24,2 kg

Average weight for S size, without pedals. Weight may differ slightly due to manufacturing tolerances.

PEDALES
Yes

COULEUR
Dark Slate

Matte Finish

ACCESSOIRES
RIDE ALPHA CNC pedals, motor protector, chainstay protector, seatstay protector, user manual

META POWER bikes are delivered with Shimano Europlug (CEE 7/7 norm) battery charger, a plug adapter is necessary for customers living in countries using different standards.

RECYCLAGE BATTERIE
Partnership with SHIMANO

In partnership with SHIMANO, COMMENCAL supports a voluntary battery recycling program for ebike batteries. For each META POWER sold COMMENCAL will contribute 7EUR to fundraising organisation COREPILE. This sum is paid through SHIMANO France. When your battery reaches the end of its life, it would be great if you could send it back to us for recycling. Contact us for more info on the procedure.

TECH

TYPE DE VELO
E-BIKE ENDURO 29"/27"

CADRE
AL-6061 + AL-6066

POIDS DU CADRE
4,1 kg - With plastic accessories.

DEBATTEMENT ARRIERE
165 mm

ENTRE-AXE / COURSE
230 x 65 mm

COMPATIBLE PIGGY BACK
Yes

BUSELURES AMORTISSEUR
20 x 10 mm front

HAUTEUR DE FOURCHE RECOMMANDEE / MAX
583 mm / 593 mm

DOUILLE DE DIRECTION
Tapered

JEU DE DIRECTION
ZS56 / ZS66

LARGEUR MAXIMALE PNEUS (ETRTO)
65 - 584 mm

STANDARD FREIN A DISQUE
PM160

DIAMETRE MAX DISQUE DE FREIN AR
220 mm

DIAMETRE TIGE DE SELLE / COLLIER DE SELLE
31,6 mm / 34,9 mm

BOITIER DE PEDALIER
SHIMANO E-BIKE

ISCG
Yes (SHIMANO Standard)

DERAILLEUR AVANT
No

AXE DE ROUE ARRIERE
12 x 148 mm

- Géometrie
- Tailles

Rocker

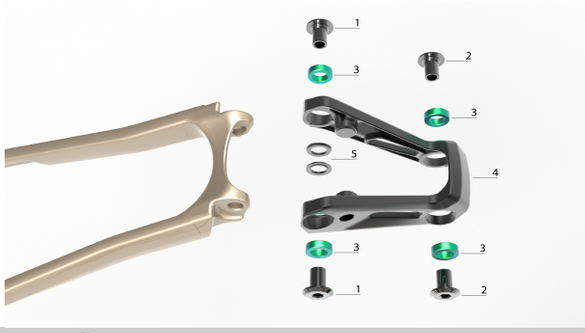

Index	Ref	Nom		Photo
1	W22MPWAXLERKSS	AXES BASCULEUR / HAUBANS META POWER SX		
2	W22MPWAXLERKFT	AXES BASCULEUR / TRIANGLE AVANT META POWER SX		
3	W19EB6902	ROULEMENT ENDURO BEARINGS 6902 LLU MAX	15 x 28 x 7	
4	W22MPWROCKER	BASCULEUR META POWER SX		
5	W20MPWWASHERRK	RONDELLES BASCULEUR META POWER V2, V2.2 ET V2.3		
BEARING KIT	W22EBMETAPOWERSX	ROULEMENTS ENDURO BEARINGS META POWER SX	2 x 6804 / 4 x 6800 / 4 x 6902 / 2 x 3802	

Clevis

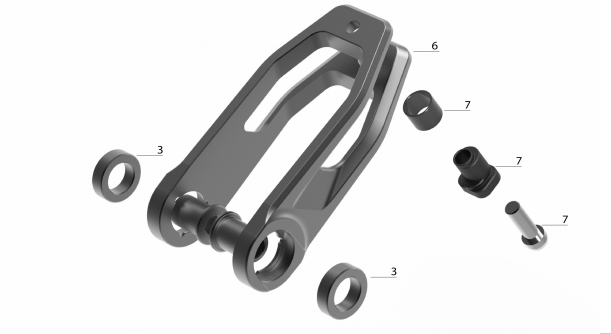

Index	Ref	Nom		Photo
3	W21EB3802	ROULEMENT ENDURO BEARINGS 3802 LLU MAX	15 x 24 x 7	
6	W21MPWTRCLEVIS	CLEVIS META POWER TR ET SX		
7	W21MPWTRAXLESHCL	KIT COMPLET FLIP CHIP AMORTISSEUR / CLEVIS META & META POWER	9 N.m	
BEARING KIT	W22EBMETAPOWERSX	ROULEMENTS ENDURO BEARINGS META POWER SX	2 x 6804 / 4 x 6800 / 4 x 6902 / 2 x 3802	

Main Pivot

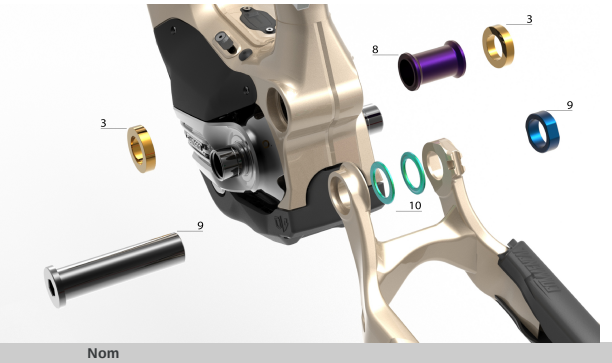

Index	Ref	Nom		Photo
10	W18MPWWASHERMP	RONDELLES PIVOT PRINCIPAL META POWER		
3	W19EB6804	ROULEMENT ENDURO BEARINGS 6804 LLU MAX	20 x 32 x 7	
8	W18MPWMPSPACER	ENTRETOISE PIVOT PRINCIPAL META POWER		
9	W18MPWAXLEMP	AXE DE PIVOT PRINCIPAL META POWER	30-35 N.m	
BEARING KIT	W22EBMETAPOWERSX	ROULEMENTS ENDURO BEARINGS META POWER SX	2 x 6804 / 4 x 6800 / 4 x 6902 / 2 x 3802	

Power Switch

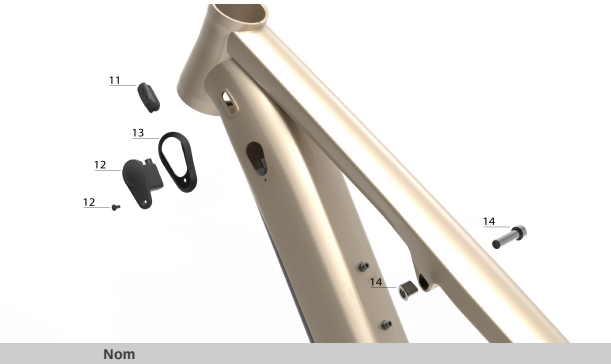

Index	Ref	Nom		Photo
11	W18SEAL1H	PROTECTION DE PASSAGE INTERNE CABLERIE - 1 TROU		
11	W18SEAL2H	PROTECTION DE PASSAGE INTERNE CABLERIE - 2 TROUS		
11	W18SEALNOH	PROTECTION DE PASSAGE INTERNE CABLERIE - 0 TROU		
12	W20SHIMIEWSW100A	INTERRUPTEUR SATELLITE ON / OFF SHIMANO E8000 META POWER		
13	W20MPWSEALSWITCH	JOINT D'INTERRUPTEUR ON / OFF META POWER		
14	W21MPWAXLESHTT	AXE AMORTISSEUR / TUBE SUPERIEUR META POWER	9-12 N.m	

Chainstays / Seatstays

Index	Ref	Nom		Photo
15	W15WASHSTKIT	RONDELLES BASES / HAUBANS META V4 ET V4.2		
16	W15AXLESTCS	AXES BASES / HAUBANS META V4, V4.2 ET META POWER	10-15 N.m	
3	W21EB6800	ROULEMENT ENDURO BEARINGS 6800 LLU MAX	10 x 19 x 5	
BEARING KIT	W22EBMETAPOWERSX	ROULEMENTS ENDURO BEARINGS META POWER SX	2 x 6804 / 4 x 6800 / 4 x 6902 / 2 x 3802	

Brake Hanger

Index	Ref	Nom	Photo
17	W21SHIMEWSS301	CAPTEUR VITESSE 800 MM SHIMANO EW-SS300	
18	W20MPWBRAKEH220	PATTE DE FREIN ARRIERE 220 MM META POWER	

Seals

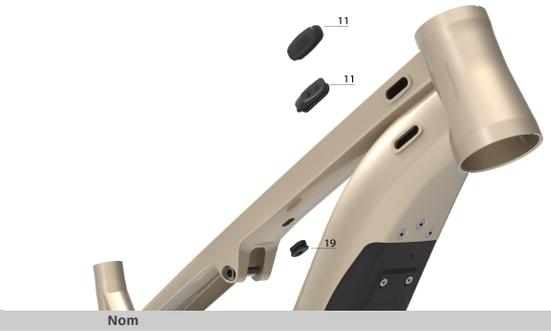

Index	Ref	Nom	Photo
11	W18SEAL1H	PROTECTION DE PASSAGE INTERNE CABLERIE - 1 TROU	
11	W18SEAL2H	PROTECTION DE PASSAGE INTERNE CABLERIE - 2 TROUS	
11	W18SEALNOH	PROTECTION DE PASSAGE INTERNE CABLERIE - 0 TROU	
19	W12HOSESEAL	JOINT DE PASSAGE DURITE INTERNE	

Battery

Index	Ref	Nom	Photo
20	W21MPWBATMOUT	KIT ASSEMBLAGE SUPPORT BATTERIE SUPERIEUR META POWER	
21	W21MPWCABLEGUIDE	GUIDES CABLE META POWER V2.2	

22	W20SHIMIBME80311A	SUPPORT BATTERIE INTEGREE SHIMANO E8000 META POWER	
23	A21BATTSHIMI630	BATTERIE INTEGREE SHIMANO BT-E8036A 630WH	
24	W21MPWPROTECBAT	PROTECTION DE BATTERIE INTEGREE META POWER V2.2	

Motor

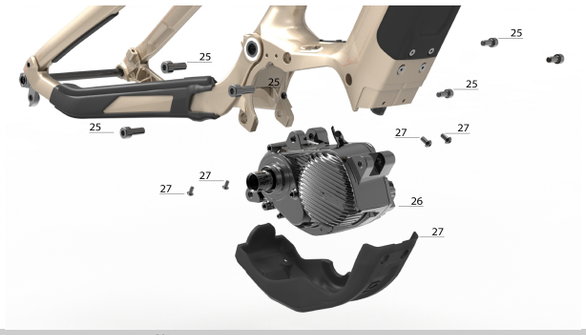

Index	Ref	Nom		Photo
25	W20MPWBOLTMOTOR	VIS FIXATION MOTEUR SHIMANO / CADRE META POWER	15 N.m	
26	W21SHIMDUEP8	MOTEUR SHIMANO EP8 META POWER		
27	W21MPWPROTECMT	PROTECTION DE MOTEUR META POWER V2.2 SHIMANO	3 N.m	

Chain Guide

Index	Ref	Nom	Photo
28	A21ALPHACHGUEP8DM	GUIDE CHAINE MEDIUM RIDE ALPHA 34T POUR EP8	

Charge Port

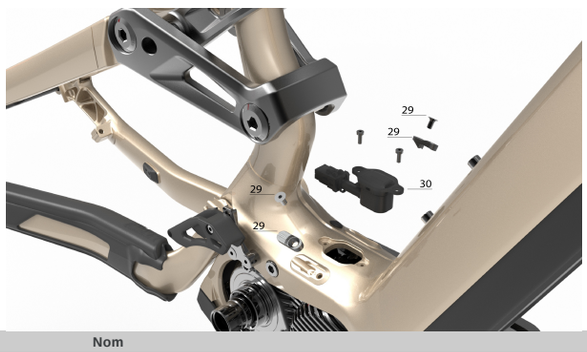

Index	Ref	Nom		Photo
29	W19CLHCABLEGUIDEB	GUIDE CABLE INFERIEUR CLASH, META, META POWER, FRS, T.E.M.P.O, DHV5	3 N.m	
30	W20SHIMIEWCP100A	PORT DE CHARGE SATELLITE SHIMANO EW CP100		

Motor Protectors

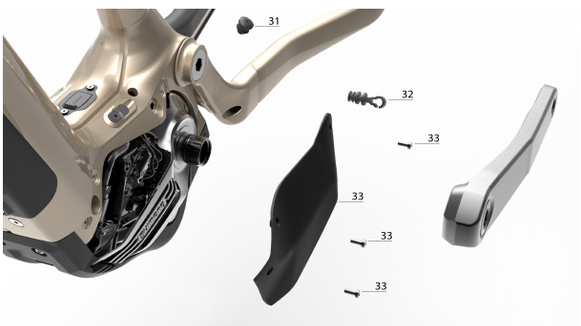

Index	Ref	Nom	Photo
31	W20MPWSEALSENSOR	JOINT PASSAGE CAPTEUR DE VITESSE META POWER	
32	W20MPWHOSEGUIDE	GUIDE GAINE PIVOT PRINCIPAL META POWER	

33	W21MPWDUCOVER	CARTER GAUCHE MOTEUR SHIMANO EP8 META POWER	

Dropouts

Index	Ref	Nom		Photo
11	W18SEAL2H	PROTECTION DE PASSAGE INTERNE CABLERIE - 2 TROUS		
34	W19AXLEWHEELBOOST	AXE DE ROUE ARRIERE - STANDARD MAXLE BOOST	12 N.m	
35	A16SSTPROTECMETAV4	PROTEGE HAUBAN META, CLASH ET META POWER		
36	W15RHRMETA	PATTE DE DERAILLEUR META HT / V4 / V4.2 / POWER / 29 / SUPREME SX	15 N.m	
37	W19MPWPROTECCS	PROTECTION DE BASE META POWER		

Downtube

Index	Ref	Nom	Photo